sunnex

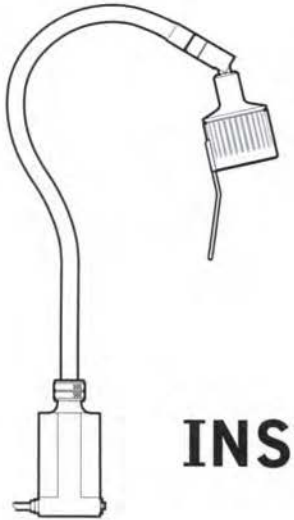

INSTRUCTIONS TO USE

››› SUNNEX TASK LIGHTING SERIES ‹‹‹

Sunnex warrants that its products shall be free from defects in material and workmanship and this warranty shall remain in force and effect for a period of three (3) years from and after the date of its delivery ("Warranty Period") provided that this warranty shall be subject the following conditions:

(a) The Sunnex installation instructions shall have been strictly complied with in all respects by the party performing the installation of the product.

(b) The product shall have been used only for the purposes for which it is intended and shall not have been abused, damaged or modified during installation or from usage.

(c) Ordinary wear and tear shall not be covered by the terms of this warranty.

(d) Written notice to Sunnex of the defective product shall be given within the Warranty Period.

If a product is found to be defective and the provisions of this section have been complied, Sunnex will repair or replace the product, at its expense.

Other than as herein expressly set forth there are no warranties made or given herein with respect to a product and the warranties given in statement are in lieu of all other warranties, which are hereby disclaimed. In particular, there are no express or implied warranties, and no warranty of merchantability or fitness for a particular purpose. Sunnex will not be liable for any special, indirect, incidental or consequential damage, loss, cost or expense whatsoever arising from the installation or use of a product or from any other cause.

Stockholm, May 1, 2008

Tom Corneliusson
President and CEO, Sunnex

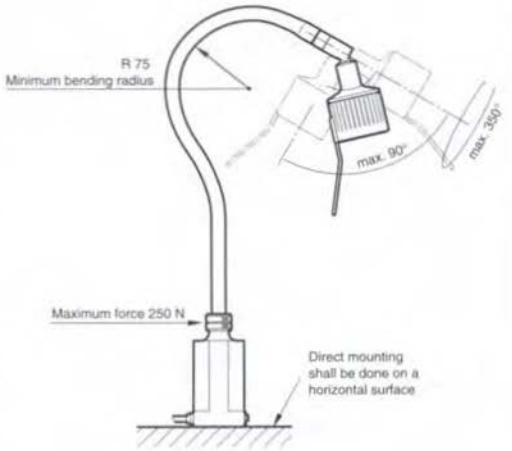

In order for the Sunnex Warranty Policy to be valid, the instructions to use, as illustrated above, also must be followed.

››› CHOOSE THE RIGHT LIGHTING

For the seven different task lighting series available from Sunnex, the name of each lamp model derives from the design of its head. Lighting in the HS-Series, for instance, builds upon the Halogen Spot head.

Each lamp head is designed with its own unique properties as regards light ergonomics, heat production, adjustability and impact resistance.

Together with each task lighting series, you will find a Lux diagram that shows the intensity and distribution of light produced by each particular lamp. The measurement is taken at a point 0,4 meters, except the Sunnex CLM where the measurement is 0,15 meters, from the light source. Using the Lux diagram, you can select which lighting will produce the particular light qualities you desire.

››› MOUNTING EQUIPMENT

Standard mounting equipment for all Sunnex lights is a base for direct mounting. Should you wish to have a different means of attachment, such as a C-clamp or a magnetic base, you can order this separately.

››› DIFFERENT KINDS OF ARMS

Each lighting series is based on a single lamp head supplemented by one of a variety of different arms, providing you with lighting that suits your needs in the best possible way.
Choose between a bendable flexible gooseneck arm, a spotlight or an articulated arm.

››› VOLTAGE

In most cases, Sunnex task lighting is available for any of the following voltages; 12, 24, 120 and 230V.

Make sure that the power supply connection voltage corresponds to the rated voltage, see label on your lamp.

All Sunnex lights are equipped with 2,0 meters power cord as standard.

››› SAFETY STANDARDS

All lighting products are designed and manufactured according to applicable safety standards and regulations. Many models have endorsements from both European and American testing institutes.

Sunnex is constantly developing the lighting designs, and certain models may have received different approvals since this brochure was printed.
Please contact your local dealer, or Sunnex directly, for updated information on which approvals a particular model currently holds.

››› CLASSIFICATION SYSTEM

To classify lighting equipment for its resistance to contact with, and penetration by, solid objects and water, we use the IP-Class system.
Unless otherwise stated, all Sunnex task lighting meets requirements IP20. This is an industry standard, implying a certain resistance to dust. Most Sunnex standard task lights are also available in IP65, which means that it is both dust-proof and water resistant.

››› STANDARD COLOURS

The standard colour for Sunnex task lighting, unless otherwise stated, is black. But it is also available in the optional off-white, RAL 9002.

››› SAFETY STANDARDS AND REGULATIONS

All Sunnex lighting products are designed and manufactured according to the following European safety standards and regulations:
Sunnex Lighting products are made according to Directive 2002/95/EEC, Restriction of Hazardous Substances in electrical and electronic equipment (RoHS).

››› THE CE MARK

CE marking is mandatory for products that are to be sold on the EU market.

››› THE S MARK

The S mark is evidence that the product has been tested and approved by Intertek as meeting minimum requirements of prescribed and harmonized European Union standards.

››› THE ENEC MARK

The ENEC mark certifies the compliance of a product with the harmonized European Union standards.

››› THE F MARK

The F mark certifies that the product could be mounted on a flammable surface in accordance with harmonized European Union standards.

››› OTHER SYMBOLS

Replace a broken lens by a new lens

Protection class II

Plug-in transformer

Low pressure bulb

This product must be sorted as Waste from Electrical and Electronic Equipment (WEEE)

››› TECHNICAL DATA

Main voltage:	**230V/AC/50Hz or 12/24V AC/DC**
Nominal effect:	**20W**
Class:	**II**
IP-Class:	**IP20**
Equipped with:	**Electronic plug-in transformer 230V/12V/20W** **Halogen bulb – 20W/G4**

››› MOUNTING INSTRUCTIONS

Mount the lamp on a horizontal surface with the four attached M4-screws. Hole pattern, see dimensional drawing on page 9.

Available for the Gooseneck arm and Spot arm are also Sunnex mounting accessories; Magnetic base, C-clamp, Wall bracket and Desktop base.

Plug in the cordset to 230V main socket. On/off function is handled with switch in lampbase.

››› CHANGE THE HALOGEN BULB

Disconnect cordset from main socket. Allow the bulb to cool down for a few minutes. Gently dismantle the front part of lamphead, pull out the broken bulb and replace with a new bulb. Do not touch the bulb with bare hands!
Push front part back on to lamp until it snaps in place.

Lux table

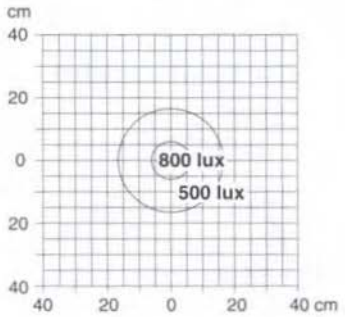

Measured 0,4 meters from the light source.

››› NOTE

Use only Sunnex original parts to secure the function and performance of Sunnex lighting series.

If the lens is broken, it must be replaced by a new lens.

Contact your local dealer if you are unsure how to handle replacements on Sunnex HT.

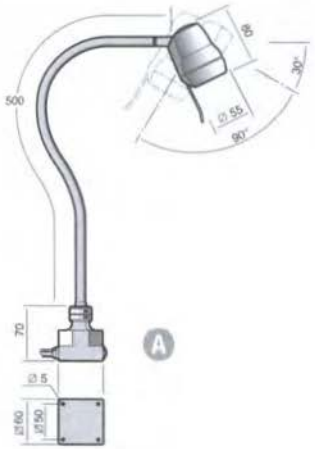

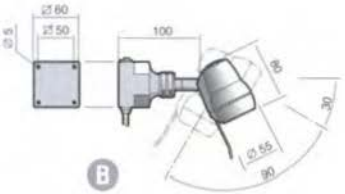

A Sunnex HT – Gooseneck arm

- Arm length; 500 mm
- 230/12V – plug-in transformer
- 12 or 24V – sub base
- With swivel joint lamp head
- With or without dimmer (with dimmer - low voltage models only)
- IP-Class; IP20
- Colour; Black or White RAL 9002
- Dichroic reflector lamp as an option

B Sunnex HT – Spot arm

- 230/12V – plug-in transformer
- 12 or 24V – sub base
- Single swivel joint in lamp head
- With or without dimmer (with dimmer - low voltage models only)
- IP-Class; IP20
- Colour; Black or White RAL 9002
- Dichroic reflector lamp as an option

Component	Part No.
1. Lamp head	18055
2. Halogen light bulb 12V/20W	15140
Halogen light bulb 24V/20W	15141
3. Reflector	18069
4. Lens, frosted	18009
5. Support ring	18281
6. Lamp shade	18057
7. Distance arc	18010

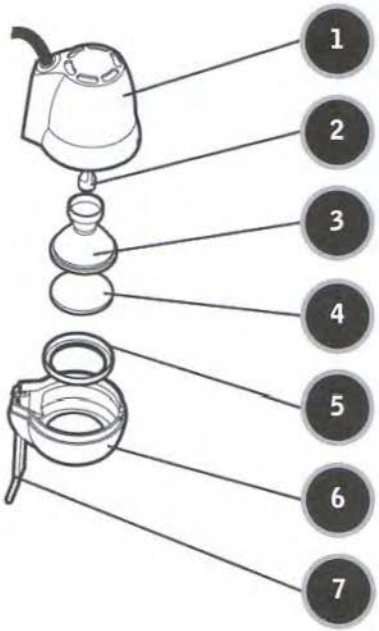

Component	Part No.
1. Lamp head with insert	15203
2. Halogen light bulb 12V/20W	15140
Halogen light bulb 24V/20W	15141
3. Reflector, spot	15128
4. Lens, clear	15402
5. Lamp shade	15117
6. Distance arc	18008

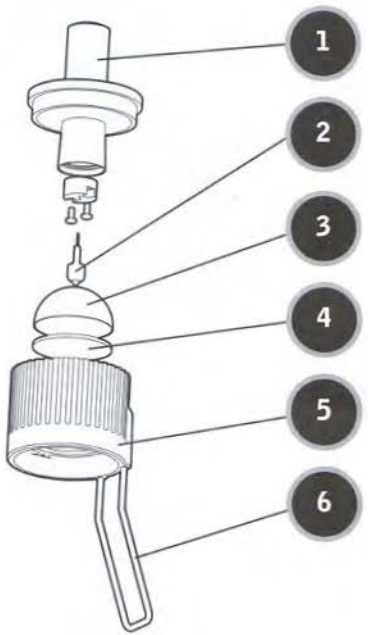

Component	Part No.
1. Screw, 3 pcs	15860
2. Lamp head	18015
3. Halogen light bulb 12V/35W	13830
Halogen light bulb 24V/35W	13837
4. Reflector	18003
5. Sealant rings	18014
6. Lens, frosted	18005
7. Lamp shade	18017
8. Distance arc	18008

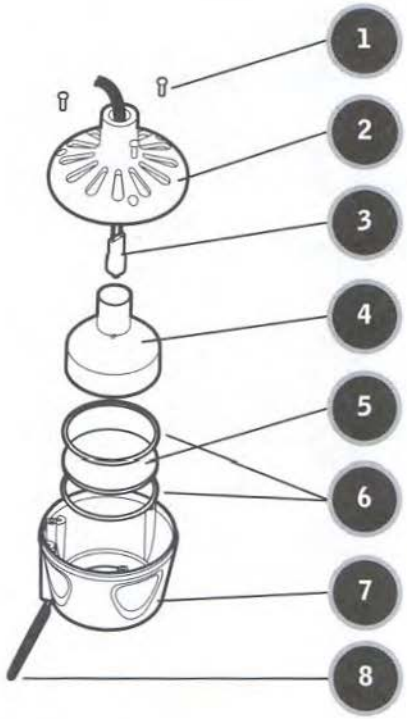

Component	Part No.
1. Lamp head	13800
2. Halogen light bulb 12V/50W	13831
Halogen light bulb 12V/75W	13832
Halogen light bulb 24V/50W	13834
Halogen light bulb 24V/75W	13835
3. Distance arc	18008
4. Reflector, flood	13821
5. Lens, clear	13825
6. Sealant ring	13816
7. Lamp shade	13810

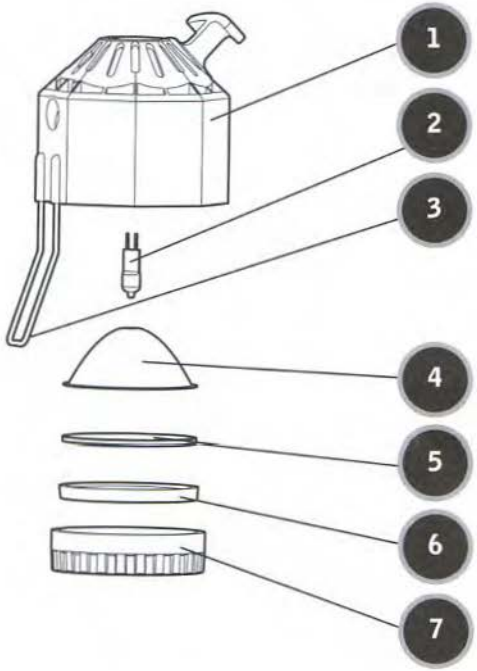

ACCESSORY		Fits model	Info	Part No.
Screw clamp		HT/HS/HM/HF/LS/LM/CL	Max. grip 42 mm	14020
		HT/HS/HM/HF/LS/LM/CL	Max. grip 60 mm	14025
		CLB/CLM/AAS	Max. grip 55 mm	18021
Magnetic base	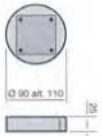	HT/HS/HM/LS/LM	Ø 90 mm	14000
		HF/CL	Ø 110 mm	12010
Wall mount	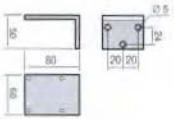	HT/HS/HM/HF/LS/LM/CL	L-bracket 50 x 80 mm	14030
Desktop base	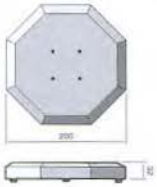	HT/HS/HM/HF/LS/LM/CL	Ø 200 mm	14015

ACCESSORY		Fits model	Info	Part No.
Trolley base	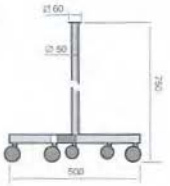	HT/HS/HM/HF/LS/LM/CL	Height 750 mm	14024
Panel mount	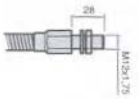	HS/HM/HF	250 mm gooseneck arm	15540
		HS/HM/HF	500 mm gooseneck arm	15550
		HS/HM/HF	700 mm gooseneck arm	15560
Rectangular base		HS/HM/HF	Installation in tight spaces	12917

ACCESSORY		Fits model	Info	Part No.
Reflector - Standard	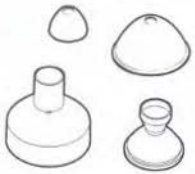	HT	Spot	18069
		HS	Spot (standard)	15128
		HS	Superspot	15127
		HS	Flood	15123
		HM	Spot	18003
		HF	Spot	13820
		HF	Flood (standard)	13821
Reflector - Dichroic lamp		HT/HS	12V/20W - 10° light cone	15124
		HT/HS	12V/20W - 38° light cone	15126
		HM/HF	12V/35W - 38° light cone	13071
		HF	12V/50W - 38° light cone	13072
		HF	12V/75W - 38° light cone	13073

ACCESSORY		Fits model	Info	Part No.
Halogen bulb		HT/HS	6V/20W	15146
		HT/HS	12V/5W	15142
		HT/HS	12V/10W	15145
		HT/HS	12V/20W	15140
		HT/HS	24V/10W	15144
		HT/HS	24V/20W	15141
		HM/HF	12V/35W	13830
		HM/HF	24V/35W	13837
		HF	12V/50W	13831
		HF	12V/75W	13832
		HF	24V/50W	13834
		HF	24V/75W	13835
Fluorescent tube		CL	9W/21 – Cool White Dulux S	15881
		CL	11W/21 – Cool White Dulux S	15882
		CLB/CLM	18W/12 – Daylight Dulux L	18022
		CLB/CLM	36W/12 – Daylight Dulux L	18024
		CLB/CLM	36W/21 – Cool White Dulux F	18026
		CLB/CLM	36W/21 – Cool White Dulux L	18028

ACCESSORY		Fits model	Info	Part No.
Transformer		HT/HS/HM/HF	230V/12V - Max. 75W, IP23	12030
		HT/HS/HM/HF	230V/24V - Max. 75W, IP23	12035
		HT/HS/HM/HF	230V/12V - Max. 300W, IP44	14054
		HT/HS/HM/HF	230V/24V - Max. 300W, IP44	14059
Transformer - plug-in		HT	230V/11,5V - Electronic, IP20	18673
		HS	230V/12V - Max 20W, IP40	14051
		HS	230V/24V - Max 20W, IP40	14056
		HM/HF	230V/12V - Max 50W, IP20	12045

ACCESSORY		Fits model	Info	Part No.
Lens/Glass		HT	Frosted (standard)	18009
		HT	Clear	18007
		HS	Clear (standard)	15402
		HS	Frosted	15112
		HS	Opaque	15113
		HS	Red	15114
		HM	Clear (standard)	18004
		HM	Frosted	18005
		HF	Clear (standard)	13825
		HF	Frosted	13826
		CL	200 mm lamp head, 9W	15861
		CL	270 mm lamp head, 11W	15862